Trade of Sheet Metalwork	
Module 2:	**Geometry and Pattern Development**
Unit 12:	**Unequal Diameter Tee-pieces**
	Phase 2

Table of Contents

List of Figures **3**

List of Tables **3**

Document Release History **4**

Module 2 – Geometry and Pattern Development **5**

Unit 12 – Unequal Diameter Tee-pieces 5
Learning Outcome: 5
Key Learning Points: 5
Training Resources: 5
Exercise: 5
Key Learning Points Code: 5

Self Assessment **7**

Index **8**

List of Figures

Figure 1 - Parallel Line Method 6

List of Tables

Document Release History

Date	Version	Comments
02/08/06	First draft	
07/04/14	2.0	SOLAS transfer

Module 2 – Geometry and Pattern Development

Unit 12 – Unequal Diameter Tee-pieces

Duration – 8 Hours

Learning Outcome:

By the end of this unit each apprentice will be able to:

- Construct side elevations
- Project end elevations
- Determine joint lines
- Develop the patterns including all allowances

Key Learning Points:

D	Layout unequal branches in round, square, rectangle and diagonal square
D	Endview projection.
D	Construct development lines.
D	Location of line joints.
D	Pattern development.
D	True shapes of holes of intersection.
D	Determination of lines of intersection.

Training Resources:

- Drawing instruments, equipment and materials
- Textbook: The Geometry of Sheet Metalwork
- Instructor handouts, drawings

Exercise:

Sample exercise - Figure 1.

Key Learning Points Code:

M = Maths D= Drawing RK = Related Knowledge Sc = Science
P = Personal Skills Sk = Skill H = Hazards

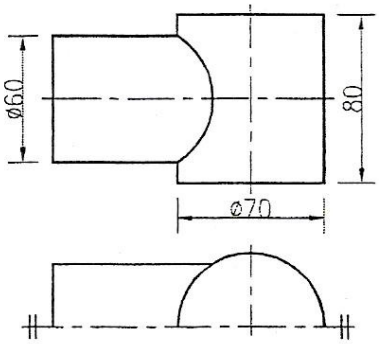

FIG. 1

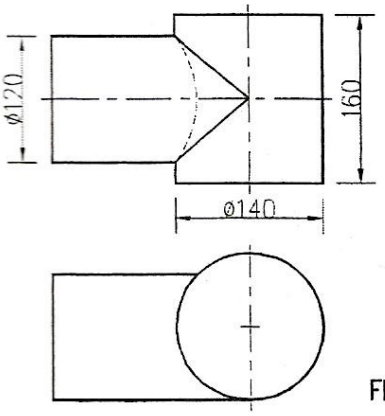

FIG. 2

Exercise/Procedure Instruction

Answer Sample Questions.

1. Shown in Fig. 1 is the elevation and half plan of a junction between two cylinders of unequal diameters.
(a) Draw the views given and determine the joint line.
(b) Develop the pattern for the branch pipe and the true-shape of the cut-out in the main pipe. Scale: full size.

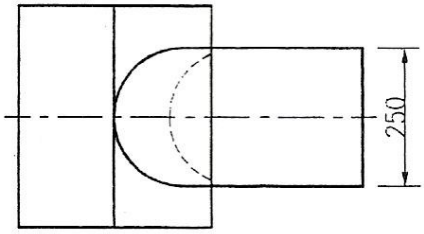

2. Shown in Fig. 2 is the elevation and plan of an off-set T-junction.
(a) Draw the views given and determine the joint line.
(b) Develop the pattern for the branch pipe and the true-shape of the cut-out in the main pipe. Scale: 1:2.

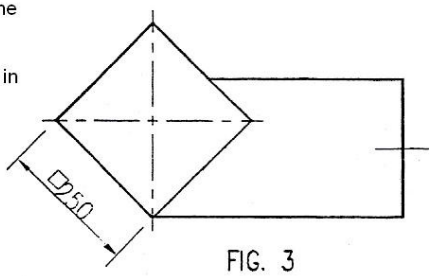

FIG. 3

3. Shown in Fig. 3 is the elevation and plan of a square duct with an off-set circular branch.
(a) Draw the views given and determine the line of intersection.
(b) Develop the pattern for the branch and the true-shape of the cut-out in the main duct. Scale: 1:5.

4. Shown in fig. 4 is the elevation and end view of a duct and an inclined branch.
(a) Draw the views given and determine the line of intersection.
(b) Develop the pattern for the branch and the true-shape of the cut-out in the main duct. Scale: 1:5.

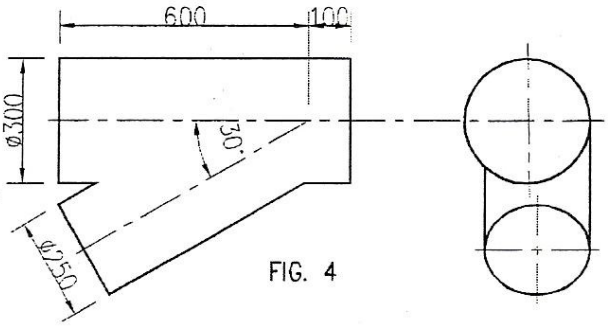

FIG. 4

Figure 1 - Parallel Line Method

Self Assessment

Index